For Global Market

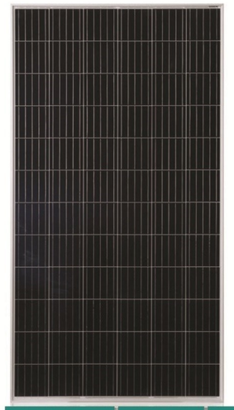

Maysun Solar

Polycrystalline PV Module

MS(300-340)P-72 Series

- ▶ High PID resist performance
- ▶ Steady power output
- ▶ Reducing cell series resistance
- ▶ More power output

System voltage 1000V/1500V standard

300	310	320	330	340

EN

ELECTRICAL SPECIFICATIONS

STC rated output (P_{mpp})*	300 Wp	310 Wp	320 Wp	330 Wp	340 Wp
PV Module size	1956*992*35 MM				
Standard sorted output	0/+5 Wp				
Warranted power output STC ($P_{nominal}$)	300 Wp	310 Wp	320 Wp	330 Wp	340 Wp
Rated voltage (V_{mpp}) at STC	36.80 V	36.91 V	37.02 V	37.15 V	37.28 V
Rated current (I_{mpp}) at STC	8.15 A	8.40 A	8.65 A	8.89 A	9.12 A
Open circuit voltage (V_{oc}) at STC	45.02 V	45.15 V	45.45 V	45.86 V	46.17 V
Short circuit current (I_{sc}) at STC	8.65 A	8.92 A	9.25 A	9.52 A	9.72 A
Module efficiency	15.5.0%	16.0%	16.5%	17.1%	17.5%
Rated output (P_{mpp}) at NOCT	209.5 Wp	216.5 Wp	223.5 Wp	230.4 Wp	237.3 Wp
Rated voltage (V_{mpp}) at NOCT	33.62 V	33.71 V	33.80 V	33.92 V	34.04 V
Rated current (I_{mpp}) at NOCT	6.23 A	6.42 A	6.61 A	6.79 A	6.97 A
Open circuit voltage (V_{oc}) at NOCT	41.32 V	41.43 V	41.70 V	42.08 V	42.23 V
Short circuit current (I_{sc}) at NOCT	6.69 A	6.90 A	7.15 A	7.37 A	7.57 A

Temperature coefficient (P_{mpp})	- 0.376%/K
Temperature coefficient (I_{sc})	+0.043%/K
Temperature coefficient (I_{mpp})	- 0.008%/K
Temperature coefficient (V_{mpp})	- 0.370%/K
Temperature coefficient (V_{oc})	- 0.282%/K
Normal operating cell temperature (NOCT)	46±2°C

Maximum system voltage (IEC)	1000V_{DC} / 1500V_{DC}
Number of diodes	3
Maximum series fuse rating	15 A
Operating Temperature	-40℃ to +85℃

* Measurement tolerance +/- 3%

IEC 61701 Salt Spray test Severity (3)

IEC 60068-2-68 Sand test

IEC 62804 1500V PID test

MAYSUN SOLAR

RELATED PARAMETERS

Cell type	Polycrystalline
Number of cells / cell arrangement	72 / 6 x12
Cells dimension	6″
Packing unit	27 modules
Weight of packing unit (for container)	621 kg / 1369 lbs

QUALIFICATION AND LINEAR WARRANTIES

Product standard	IEC61215, 61730
Extended product warranty	12 years
Output decline 3%/year performance P_{mpp} (STC)	1st year
Output decline 0.7%/year performance P_{mpp} (STC)	2nd~ 25th years

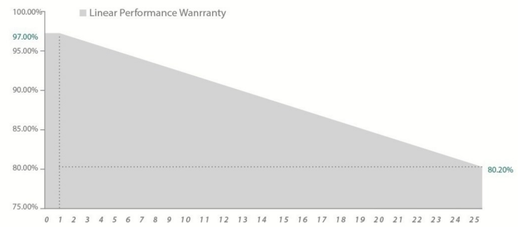

MECHANICAL SPECIFICATIONS

Outer dimensions (L x W x H)	1956 x 992 x 35 mm 77 x 39.06 x 1.38 in
Frame technology	Aluminum, silver anodized
Module composition	Glass / EVA / Backsheet (white)
Weight (module only)	21.8 kg / 48.1 lbs
Front glass thickness	3.2 mm / 0.13 in
Junction box IP rating	IP 67
①Cable length(IEC)	600/900 mm / 23.62/35.43 in
Cable diameter (IEC)	12 AWG /4 mm^2
②Maximum load capacity	5400 Pa
Fire performance (IEC)	Class C
Connector type (IEC)	MC4 compatible

Refer to Maysun Solar crystalline installation manual.

I-V Curves of PV module MS3 10P-72 at various solar irradiance

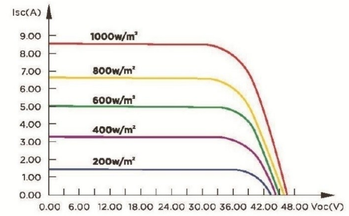

MODULE DIMENSION DETAILS

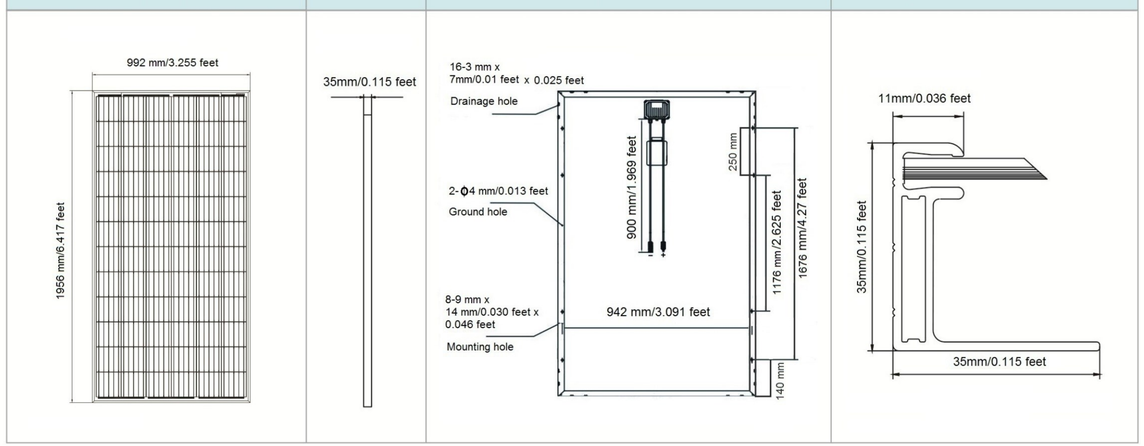

Maysun Solar FZCO Reserves the right of final interpretation.
Specifica tions and designs included in this datasheet are subject to change without notice.

Maysun Solar FZCO
Address: No.FZS2AB01, Jebel Ali, Dubai, UAE
Website: www.maysunsolar.com